www.tempo-foam.com

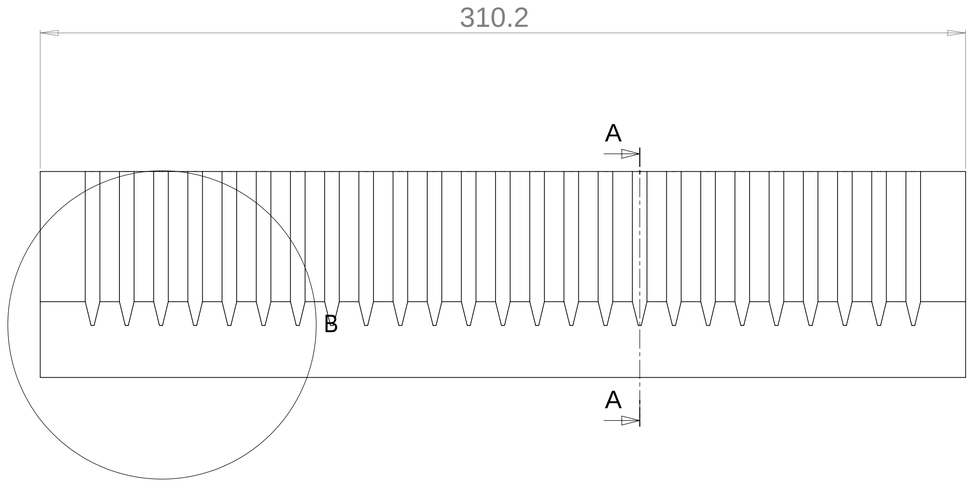

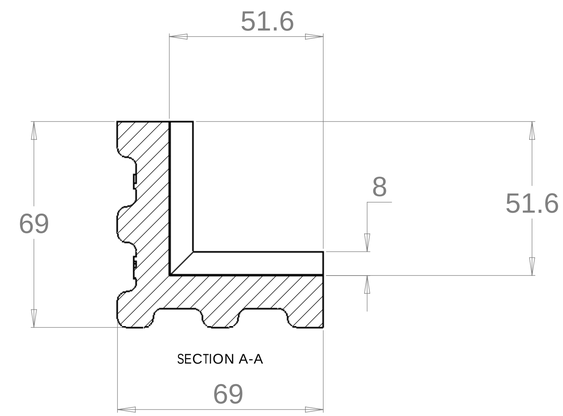

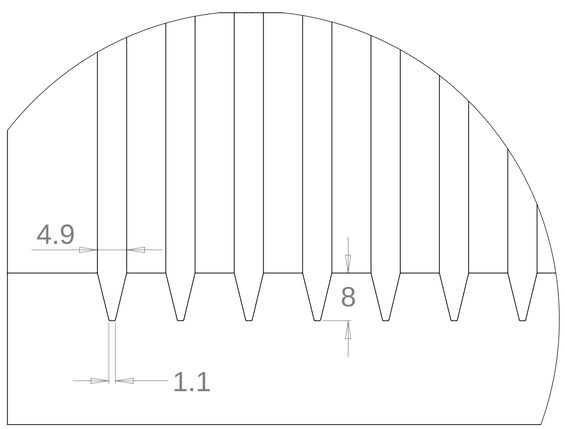

DETAIL B
SCALE 2 : 1

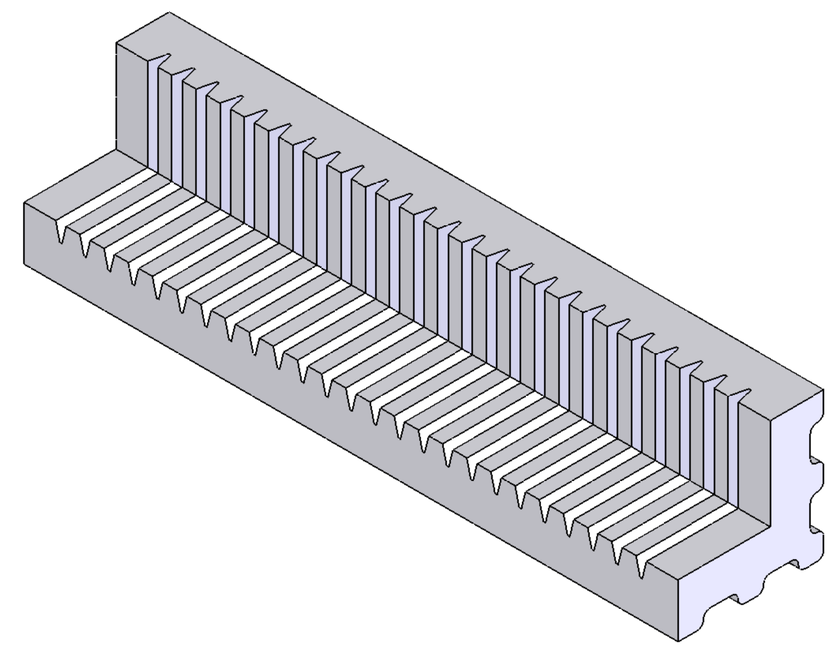

Note:

1) Material To be 64g/l density (4.0 lb/ft3) EPS
2) 1 Degree Draft TYP
3)

PROPRIETARY AND CONFIDENTIAL

THE INFORMATION CONTAINED IN THIS DRAWING IS THE SOLE PROPERTY OF Tempo Plastic Co. Inc. ANY REPRODUCTION IN PART OR AS A WHOLE WITHOUT THE WRITTEN PERMISSION OF Tempo Plastic Co. Inc IS PROHIBITED.

UNLESS OTHERWISE SPECIFIED:
DIMENSIONS ARE IN Millimeters
TOLERANCES:
FRACTIONAL ±
ANGULAR: MACH ± BEND ±
TWO PLACE DECIMAL ±
THREE PLACE DECIMAL ±
INTERPRET GEOMETRIC TOLERANCING PER:
MATERIAL
FINISH

	NAME	DATE
DRAWN	Junior	9/10/08
CHECKED		
ENG APPR.		
MFG APPR.		
Q.A.		

NEXT ASSY | USED ON
APPLICATION

1227 N. Miller Park Ct.
Visalia, CA 93291

Tempo Plastic Co, Inc.

TITLE:

#222

SIZE	DWG. NO.	REV
D		A

SCALE: 1:1 | SHEET 1 OF 1

REV
D # 222