www.tempo-foam.com

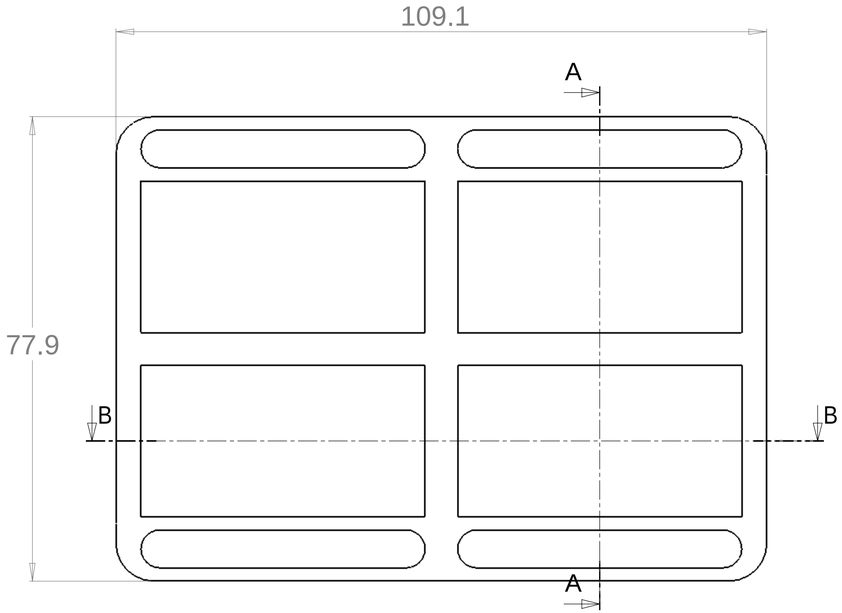

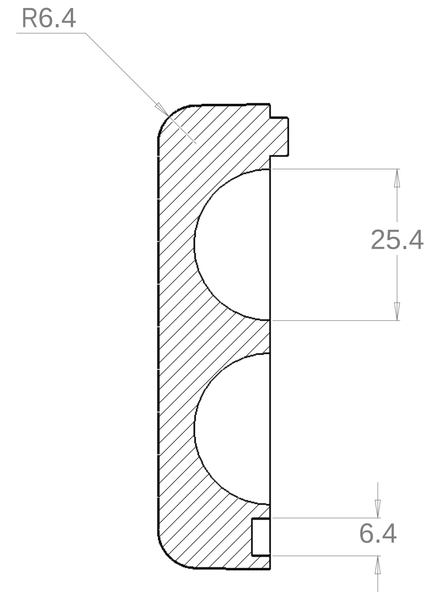

SECTION A-A

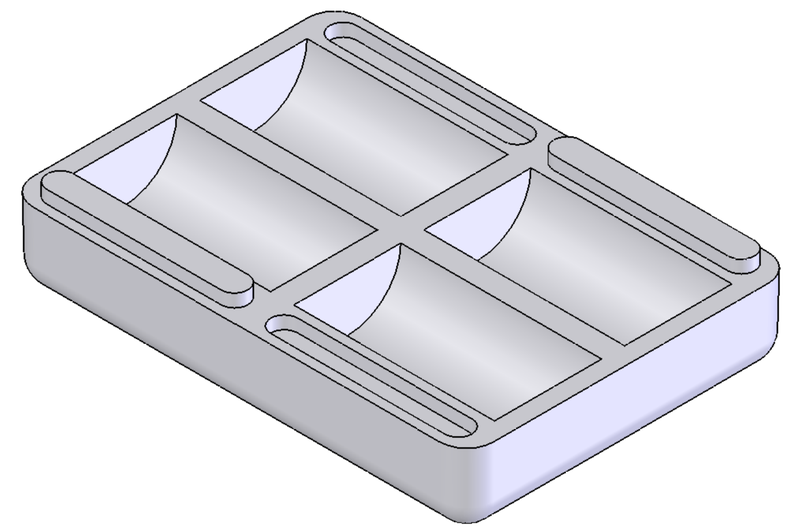

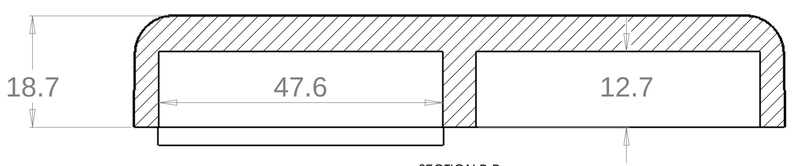

SECTION B-B

Note:

1) Material To be 64g/l density (4.0 lb/ft3) EPS
2) 1 Degree Draft TYP
3) Volume = 6.4 cubic inches

PROPRIETARY AND CONFIDENTIAL

THE INFORMATION CONTAINED IN THIS DRAWING IS THE SOLE PROPERTY OF Tempo Plastic Co. Inc. ANY REPRODUCTION IN PART OR AS A WHOLE WITHOUT THE WRITTEN PERMISSION OF Tempo Plastic Co. Inc IS PROHIBITED.

NEXT ASSY | USED ON
APPLICATION

UNLESS OTHERWISE SPECIFIED:
DIMENSIONS ARE IN Milimeters
TOLERANCES:
FRACTIONAL ±
ANGULAR: MACH ± BEND ±
TWO PLACE DECIMAL ±
THREE PLACE DECIMAL ±
INTERPRET GEOMETRIC TOLERANCING PER:
MATERIAL
FINISH

	NAME	DATE
DRAWN	Junior	6/24/08
CHECKED		
ENG APPR.		
MFG APPR.		
Q.A.		

1227 N. Miller Park Ct.
Visalia, CA 93291

Tempo Plastic Co, Inc.

TITLE:

TPC 4SV

SIZE D | DWG. NO. | REV

SCALE: 2: 1 | SHEET 1 OF 1

REV | TPC 4SV | D