www.tempo-foam.com

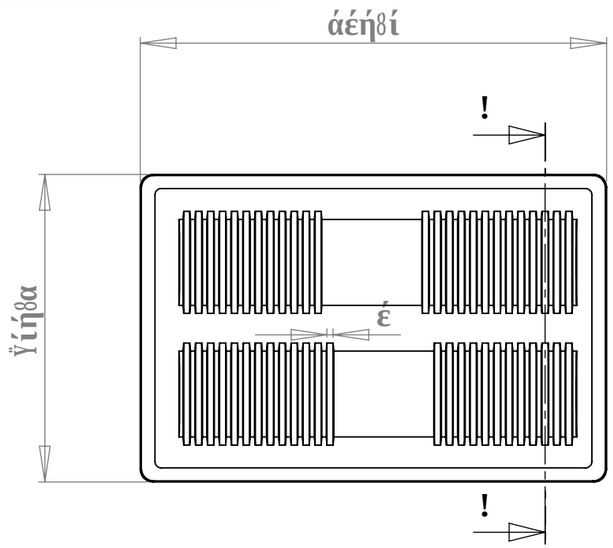

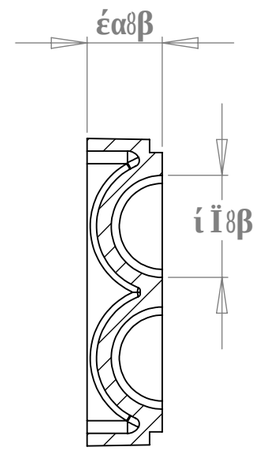

3%#4) / . !Ź!
3#!,%Ÿ ą́ ź

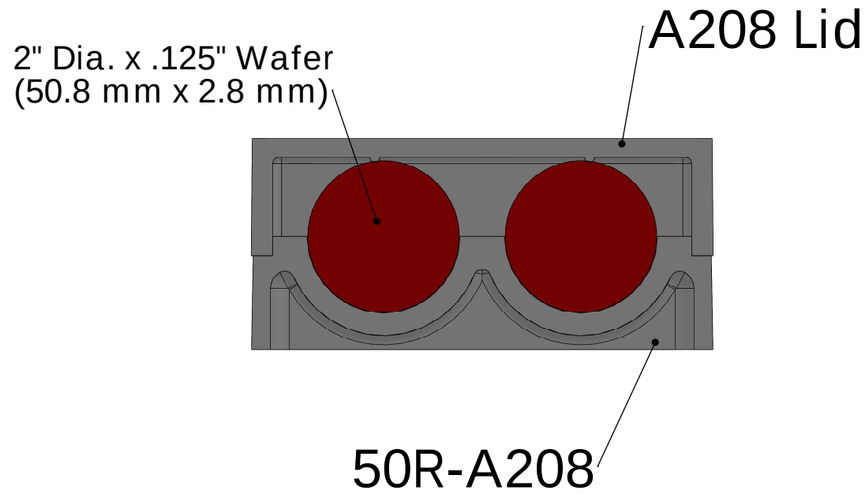

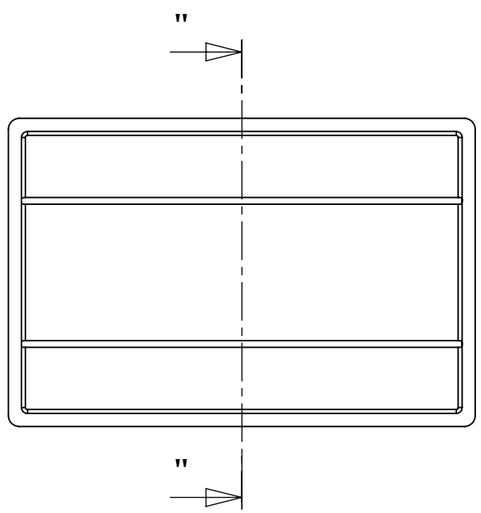

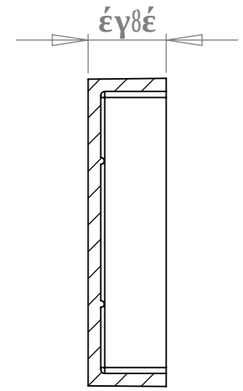

3%#4) / . "Ź"
3#!,%Ÿ ą́ ź

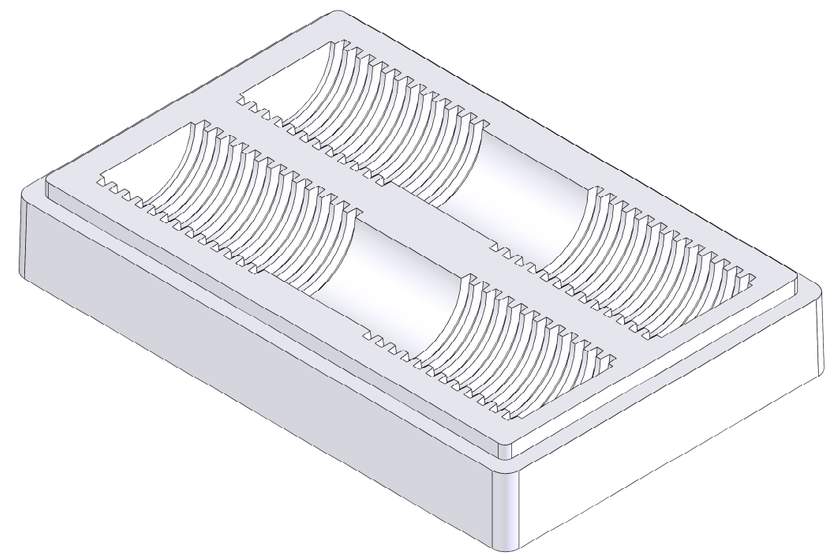

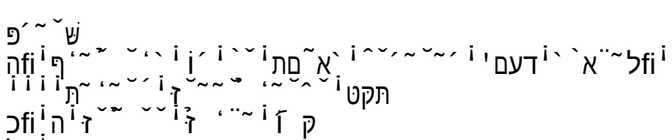

		UNLESS OTHERWISE SPECIFIED:		NAME	DATE
		DIMENSIONS ARE IN MM TOLERANCES: FRACTIONAL ± ANGULAR: MACH ± BEND ± TWO PLACE DECIMAL ± THREE PLACE DECIMAL ±	DRAWN	JUNIOR	βΓγΓŸΪ
			CHECKED		
			ENG APPR.		
			MFG APPR.		
		INTERPRET GEOMETRIC TOLERANCING PER:	Q.A.		
		MATERIAL	COMMENTS:		
NEXT ASSY	USED ON	FINISH			
APPLICATION		DO NOT SCALE DRAWING			

PROPRIETARY AND CONFIDENTIAL

THE INFORMATION CONTAINED IN THIS DRAWING IS THE SOLE PROPERTY OF **TEMPO PLASTIC CO, INC.** ANY REPRODUCTION IN PART OR AS A WHOLE WITHOUT THE WRITTEN PERMISSION OF **TEMPO PLASTIC CO, INC.** IS PROHIBITED.

TEMPO PLASTIC CO, INC.

TITLE: **í Ï 2Ź ! á Ï β**

SIZE	DWG. NO.	REV
B		A

SCALE: 1:3 | SHEET 1 OF 1