www.tempo-foam.com

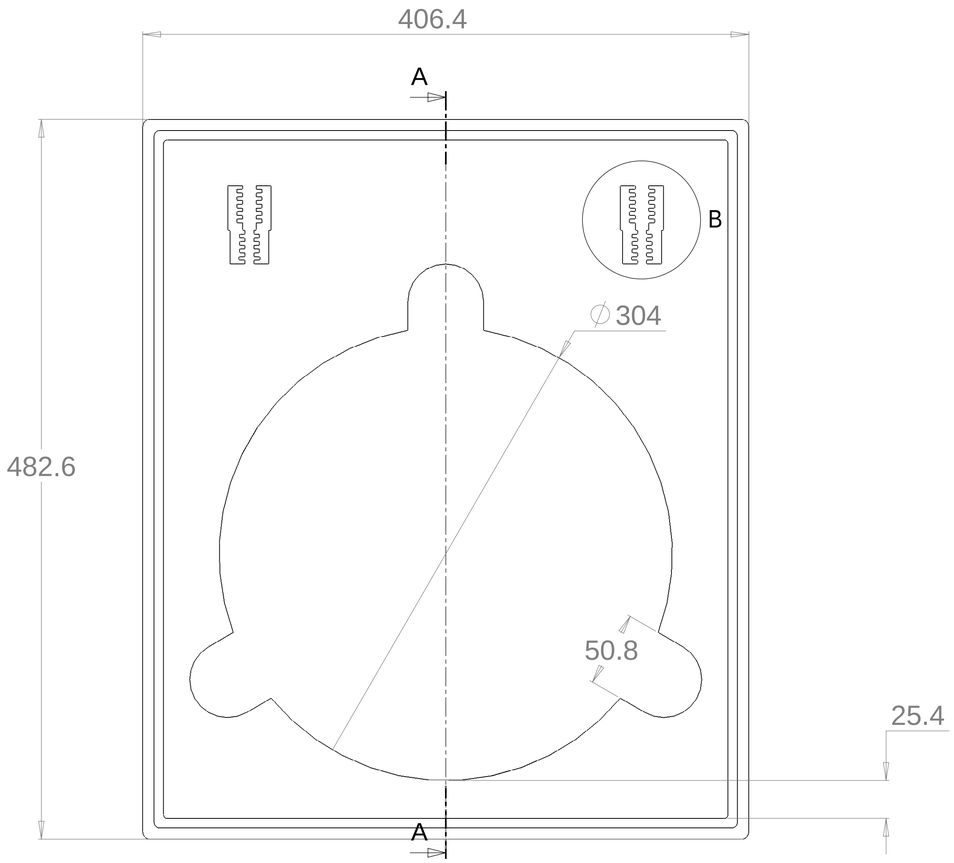

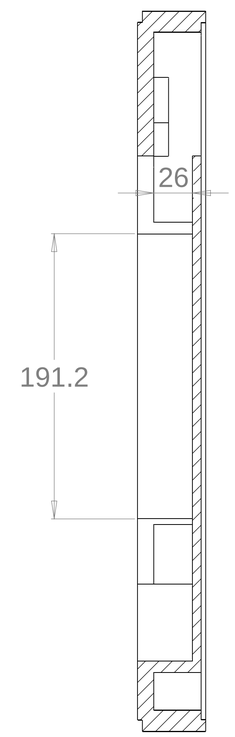

SECTION A-A

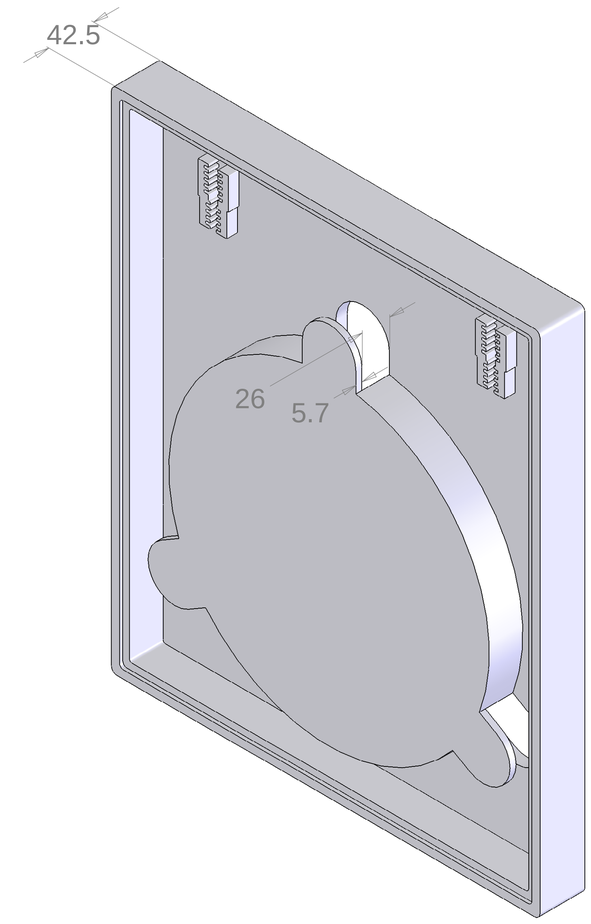

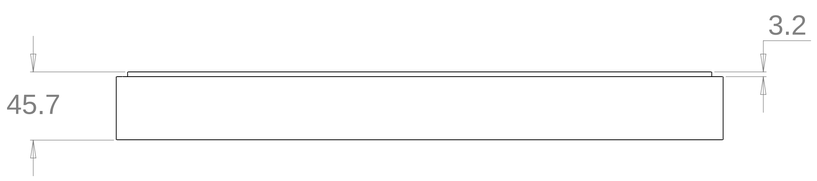

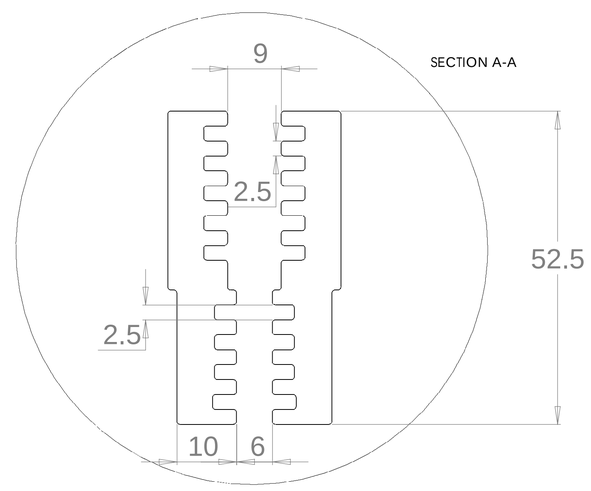

DETAIL B
SCALE 2 : 1

Note:

1) Material To be 64g/l density (4.0 lb/ft3) EPS
2) 1 Degree Draft TYP
3)

PROPRIETARY AND CONFIDENTIAL

THE INFORMATION CONTAINED IN THIS DRAWING IS THE SOLE PROPERTY OF Tempo Plastic Co. Inc. ANY REPRODUCTION IN PART OR AS A WHOLE WITHOUT THE WRITTEN PERMISSION OF Tempo Plastic Co. Inc IS PROHIBITED.

			NAME	DATE
UNLESS OTHERWISE SPECIFIED:		DRAWN	Junior	7/1/08
DIMENSIONS ARE IN Millimeters		CHECKED		
TOLERANCES: FRACTIONAL± ANGULAR: MACH± BEND ±		ENG APPR.		
TWO PLACE DECIMAL ±		MFG APPR.		
THREE PLACE DECIMAL ±		Q.A.		
INTERPRET GEOMETRIC TOLERANCING PER:				
MATERIAL				
FINISH				
NEXT ASSY	USED ON			
APPLICATION				

1227 N. Miller Park Ct.
Visalia, CA 93291

Tempo Plastic Co, Inc.

TITLE:
304mm Fiber Coil Stack Pack

SIZE D | DWG. NO. | REV

SCALE: 1: 2 | SHEET 1 OF 1

D 304 mm Stack Pack REV